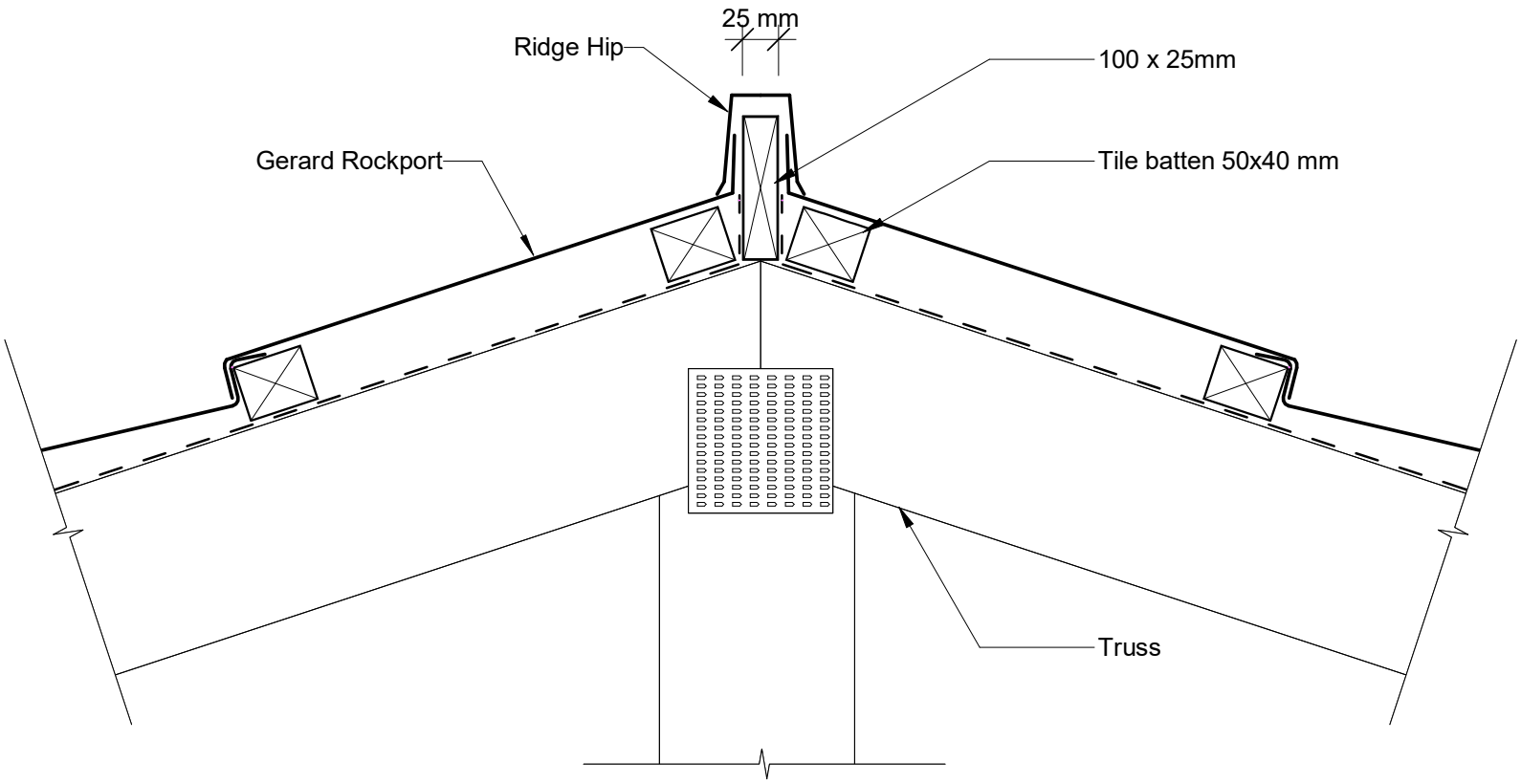

© 2020 Terms Of Use Disclaimer: This information is intended solely as a guide for the use of Gerard Roofs products. Before using you should ensure that the product is suitable for use in the specific application. Nothing in this information constitutes a statement of fitness for particular purpose and appropriate expert advice is to always be obtained. Gerard Roofs makes no warranty regarding the use of this information with non - Gerard Roofs products. This drawing is the property of Gerard Roofs. It cannot be copied in any form and must be returned to Gerard Roofs upon request.

All dimensions in millimetres

GERARD
Roofing Designed to Endure

Roof Tiles

Gerard Rockport

Ridge - Box Trim Ridge Board/Batten -Truss

Date: August 2020
Scale: 1 : 5

www.gerardroofs.co.nz
Phone 0800 100 244
Or contact us online

Quick Code: **gerard_rockport_GR_RR_230**